QUADPACK

PRODUCT DATA SHEET

PACK NAME	Light Me Up
PACK CODE	10-704
PACK TYPE	Flow Pen
CATEGORY	Makeup

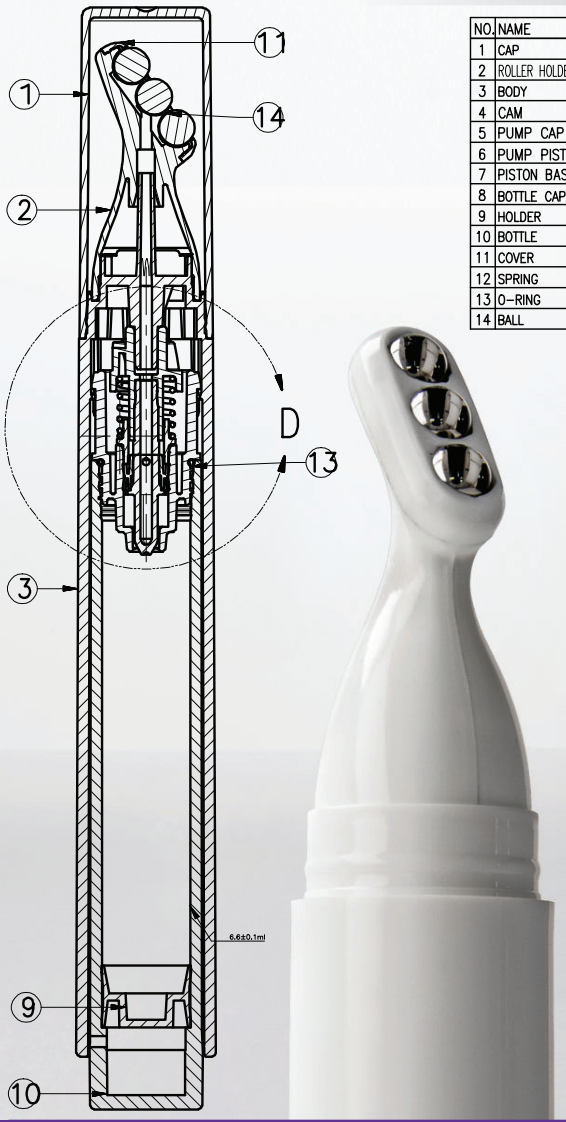

NO.	NAME	MATERIAL	WEIGHT(G)
1	CAP	PP	2.082
2	ROLLER HOLDER	PP	0.850
3	BODY	PP	7.156
4	CAM	POK	0.370
5	PUMP CAP	POK	0.100
6	PUMP PISTON	LLDPE	0.060
7	PISTON BASE	POK	0.170
8	BOTTLE CAP	PP	0.937
9	HOLDER	LDPE	0.316
10	BOTTLE	PP	4.913
11	COVER	PP	0.090
12	SPRING	SUS 304	0.330
13	O-RING	NBR	0.040
14	BALL	SUS 304	0.440

DESCRIPTION

The Light Me Up Airless Refillable Flow Pen is the ideal companion for skincare and makeup formulas that require airless protection and an eco-aware attitude. The four different sensorial cold touch tips produce an amazing caring experience during the one-step, direct application. To reuse the pack, just swap out the inner bottle!

BENEFITS

Airless Click pen.
Refillable
Bottle, Body, Cap, PP. Cap and Body available also with 30% PCR PP.
Available in 6,6ml with 4 different cold touch applicators.
For liquid and low viscosity formulas

APPLICATIONS

Size: 6.6ml
Item Shape: Cylindrical

TECHNICAL SPECIFICATIONS

GENERAL INFORMATION

DIMENSIONS

Outer Length	18.5
Outer Width	18.5
Outer Height	145.8

MATERIALS

Bottle	PP (30% PCR)
Body	PP (30% PCR)
Cap	PP (30% PCR)

DECO OPTIONS

Declared	6.6ml
Dosage	.045cc

PRODUCTION & PACKING

PRODUCTION

Lead time	6 - 8 weeks
MOQ	10k
Plant location	Asia

PACKING SPECS

	Carton Size	G.W	N.W	Qty/Ctn
Overcap + Applicator head + Outer Bottle	408*294*306	10.3kg	8.16kg	600
Refillable Cap	400*328*282	8.52kg	6.36kg	1,200

DECO OPTIONS

CAP & OUTER BOTTLE

Silk Screen, Hot Stamping, Metal Overshell in Gold or Silver

CAP, OUTER BOTTLE & REFILL BOTTLE

Shiny Silver UV Metalization, Spray, Clear coating