QUADPACK

PRODUCT DATA SHEET

PACK CODE	BTL2173-15ml
PACK TYPE	Fragrance
CATEGORY	Skincare

DESCRIPTION 15ml spray pack

BENEFITS
Portable solution
Ideal for travel
PP bottle for maximum compatibility

APPLICATIONS Fragrance, sanitizer, moisturizer

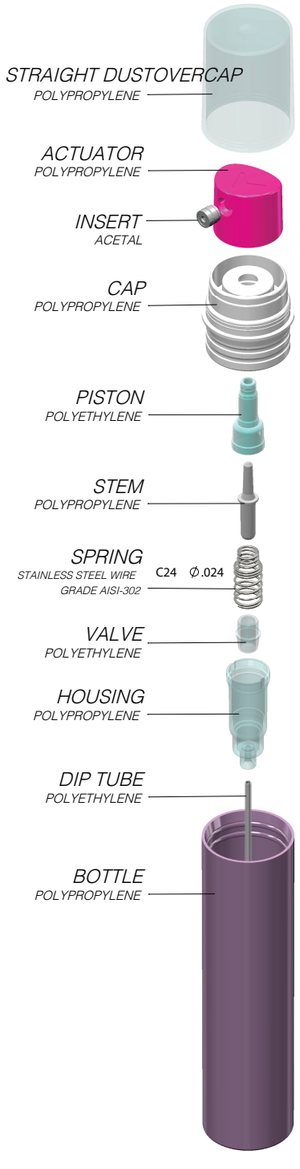

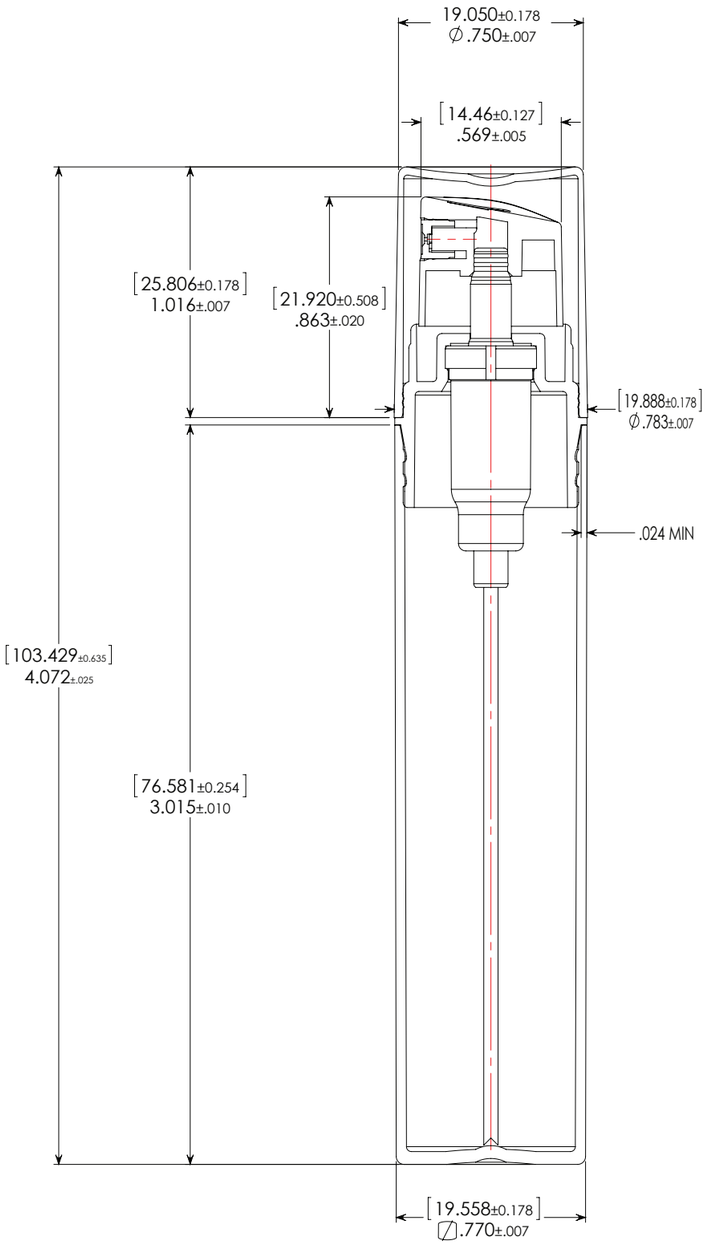

TECHNICAL SPECIFICATIONS

GENERAL INFORMATION

DIMENSIONS

Total Height	103.429±0.635mm
Diameter	ø.6±0.127mm

MATERIALS

Overcap	PP	Stem	PET
Actuator	PP	Spring	SST
Insert	Acetal	Valve	PP
Piston	PP	Housing	PP
Bottle	PP		

DOSAGE

110mcl ± 10mcl

CAPACITY

Declared	15ml

PRODUCTION & PACKING

PRODUCTION

Lead time	75 days
MOQ	25k
Plant location	Mexico

PACKING SPECS

	Carton Size
Bottle & Pump	50x35X26

DECO OPTIONS

Cap
Injection color
Bottle
Injection color, silk screening & hot stamping
Collar & actuator
Injection color